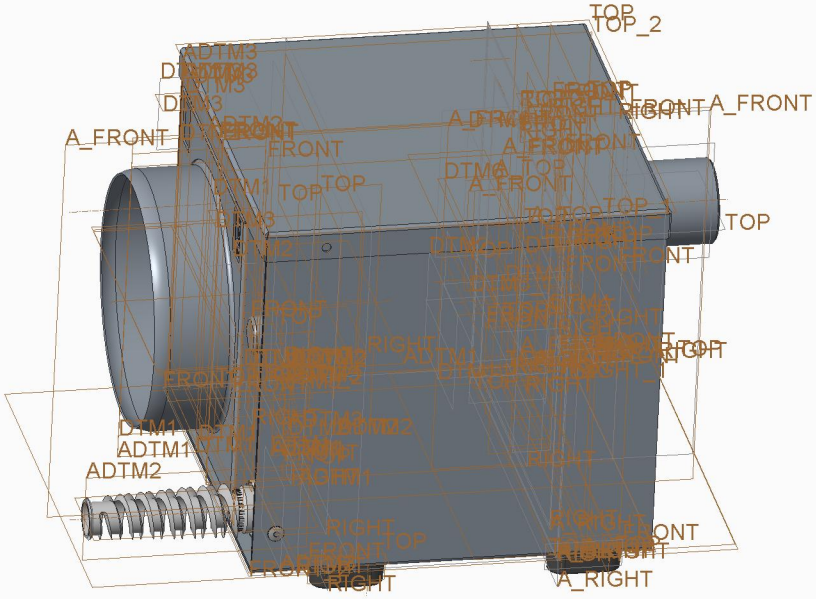
TOP
TOP_2
ADTM3
A_FRONT
A_FRONT
FRONT
TOP
TOP
TOP
FRONT
RIGHT
DTM1
ADTM1
ADTM2
RIGHT
FRONT
TOP
RIGHT
A_RIGHT